COLOR	ITEM #
White/White	13770-53301
Arctic White	13770-53302
Seafoam	13770-53303

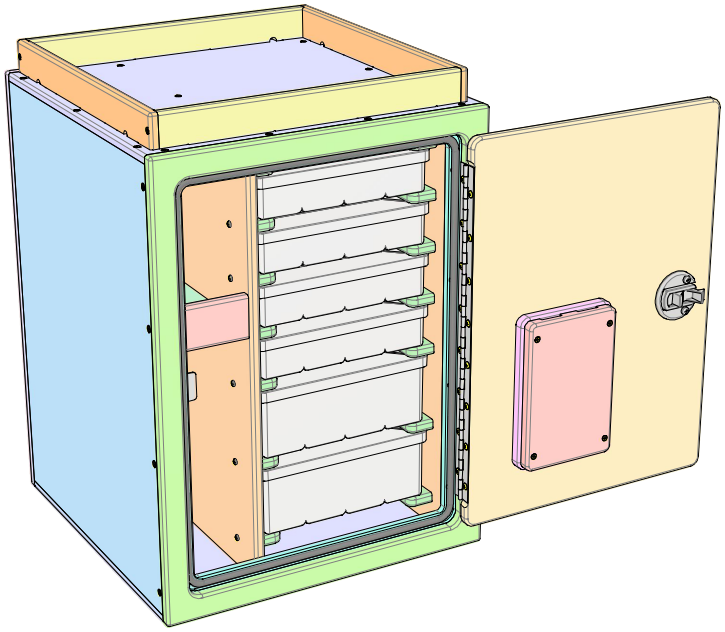

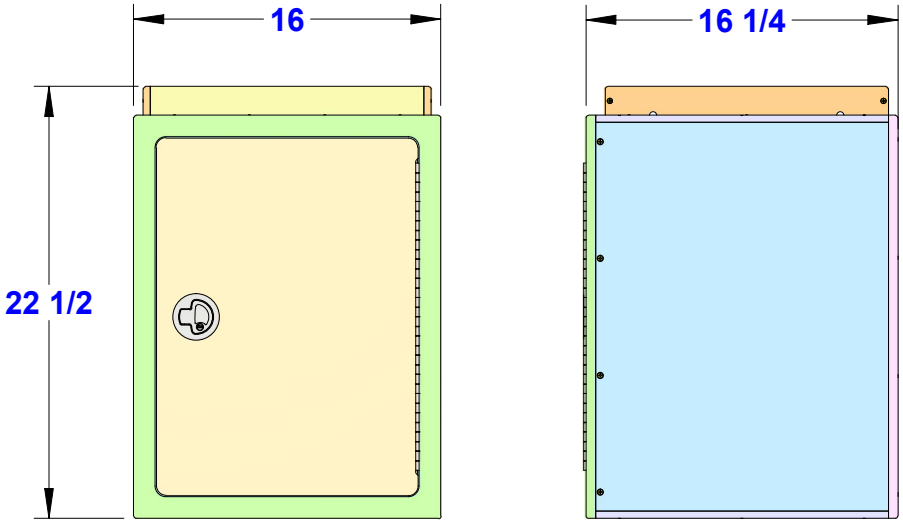

Key Dimensions
16" wide x 22-1/2" tall x 16-1/4" deep

Fits Hole Cutout
Free-Standing

Features
(2) 3730 Plano Tackle Trays: 14" wide x 9" deep x 3-1/4" tall
(4) 3700 Plano Tackle Trays: 14" wide x 9" deep x 2" tall
(1) 2-Knife holder
(1) Top Storage Area: 3-1/8" wide x 8" tall x 13-5/8" deep
(1) Bottom Storage Area: 3-1/8" wide x 11-1/2" tall x 14-3/4" deep

Copyright 2025 Teak Isle MFG. This drawing is the property of Teak Isle MFG. Any use or reproduction in whole or part is prohibited without the express written consent of Teak Isle MFG.