COLOR	ITEM #
White/White	13770-53311
Arctic White	13770-53312
Seafoam	13770-53313

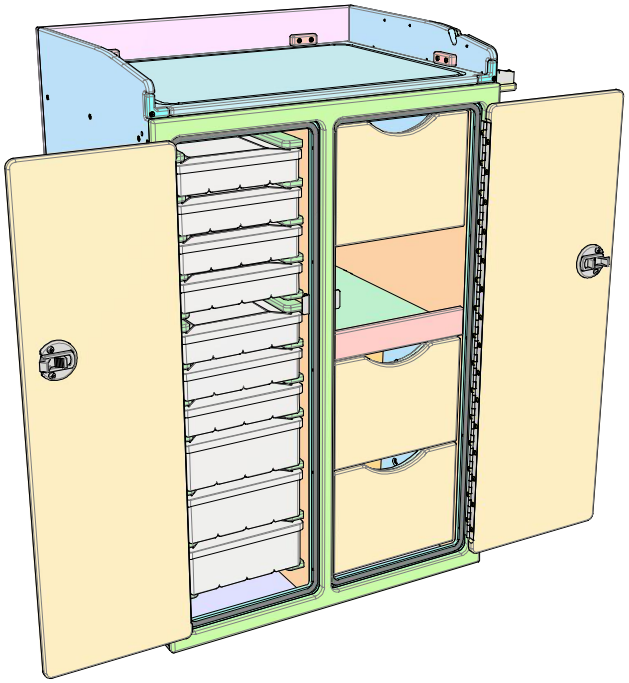

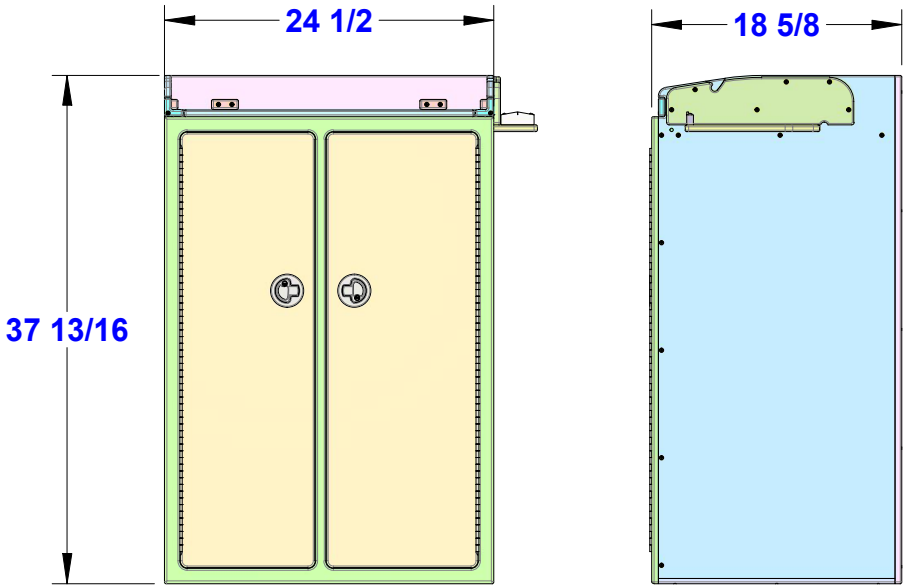

Key Dimensions
24-1/2" wide x 37-13/16" tall x 18-5/8" deep

Fits Hole Cutout
Free-Standing

Features

(3) 3730 Plano Tackle Trays: 14" wide x 9" deep x 3-1/4" tall
(8) 3700 Plano Tackle Trays: 14" wide x 9" deep x 2" tall
(3) Drawers: 8-11/32" wide x 15-3/8" deep x 7" tall
(1) Shelf: 10-3/8" wide x 16-1/8" deep x 7-1/4" tall
(1) Removable Fillet Table Top: 23-7/16" wide x 17-1/2" long

Copyright 2025 Teak Isle MFG. This drawing is the property of Teak Isle MFG. Any use or reproduction in whole or part is prohibited without the express written consent of Teak Isle MFG.